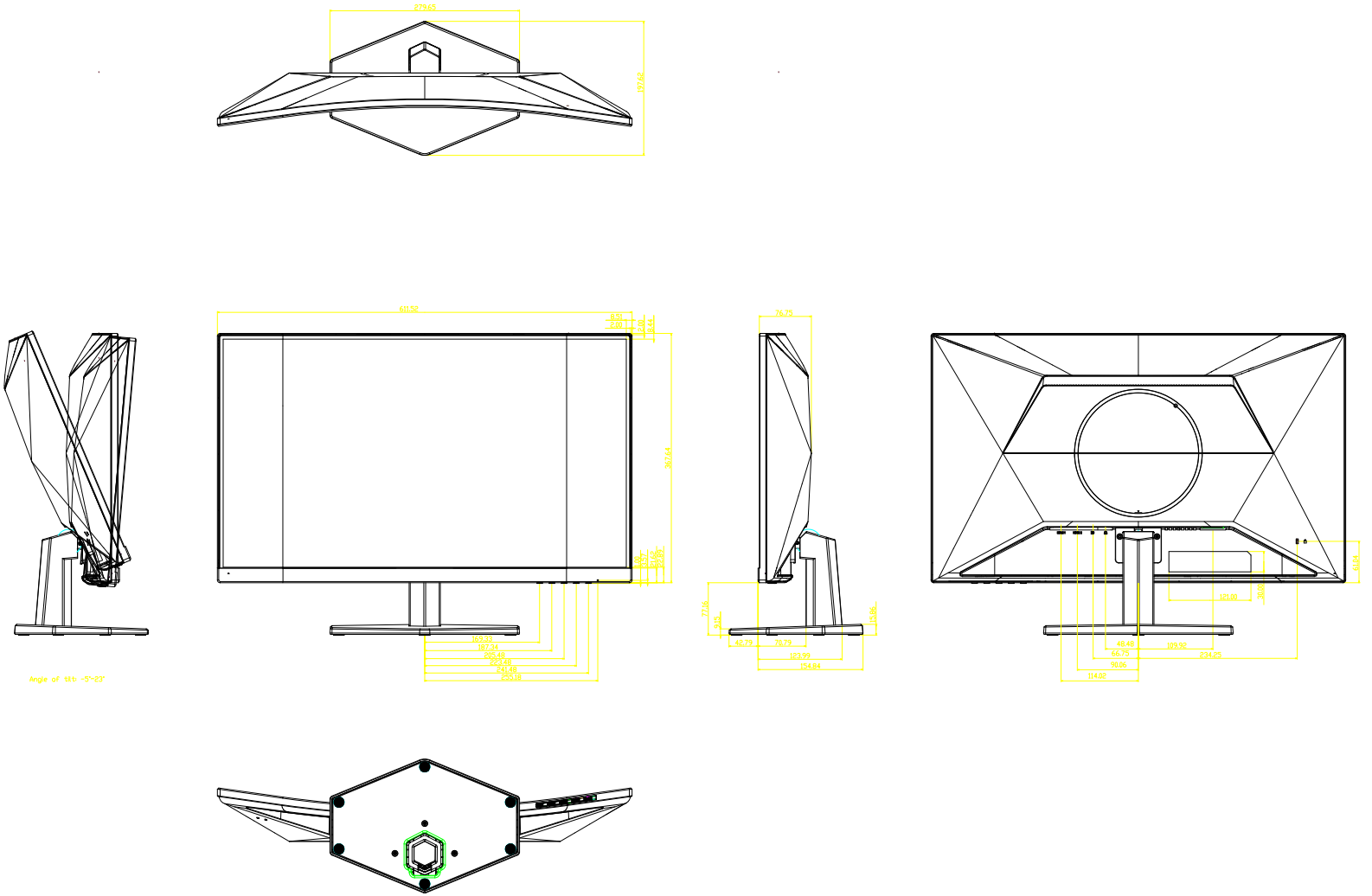
279.65
177.82
611.52
8.51
5.00
2.00
8.51
367.64
169.06
187.04
205.48
223.48
241.48
255.18
76.75
77.16
3.45
15.86
42.79
78.79
123.99
154.84
121.00
30.00
61.00
48.48
109.92
66.75
234.25
90.06
114.02
Angle of tilt -5~23°